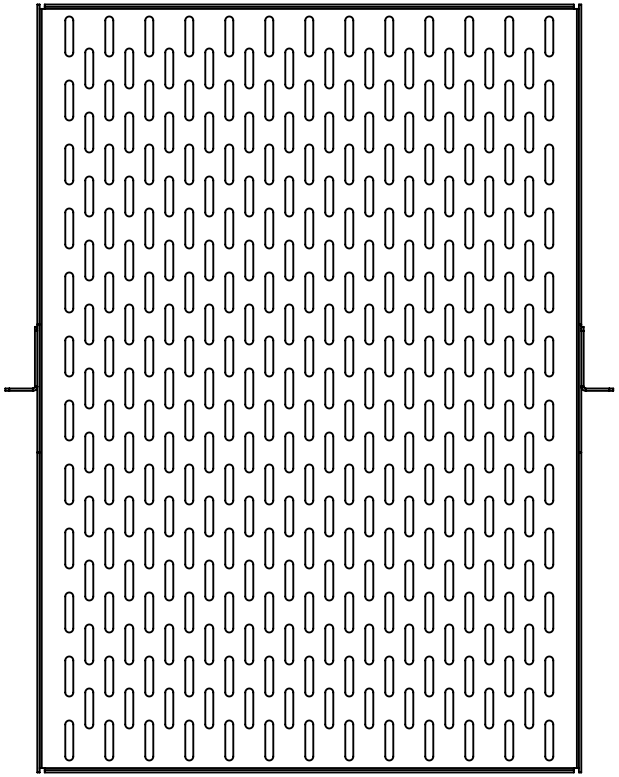

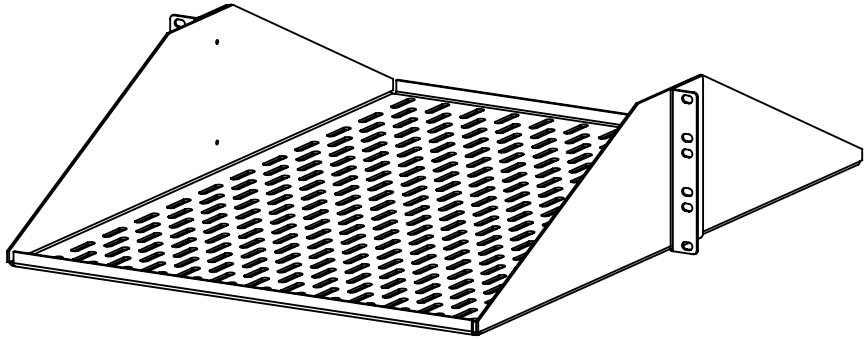

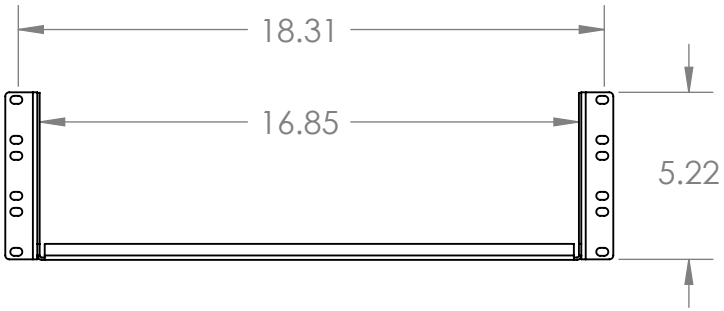

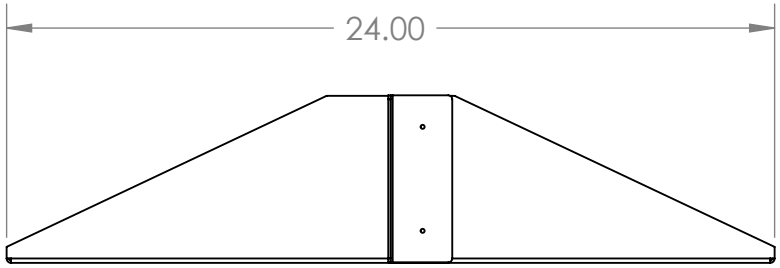

KENDALL HOWARD™
INNOVATORS IN PRODUCT DESIGN

PROPRIETARY AND CONFIDENTIAL

THE INFORMATION CONTAINED IN THIS DRAWING IS THE SOLE PROPERTY OF KENDALL HOWARD LLC. ANY REPRODUCTION IN PART OR AS A WHOLE WITHOUT THE WRITTEN PERMISSION OF KENDALL HOWARD LLC IS STRICTLY PROHIBITED. THE PRODUCTS SHOWN AND DESCRIBED IN THIS DRAWING ARE THE INTELLECTUAL PROPERTY OF KENDALL HOWARD LLC. THEY MAY BE PROTECTED BY TRADE SECRETS, PATENTS, TRADEMARKS, COPYRIGHT LAWS, OR A COMBINATION OF SOME OR ALL OF THESE LAWS. COPYRIGHT 2010 KENDALL HOWARD LLC.

	NAME	DATE
DRAWN	krh	
CHECKED	mjj	9/28/2011
ENG APPR.		
MFG APPR.		

UNLESS OTHERWISE SPECIFIED:
DIMENSIONS ARE IN INCHES
DO NOT SCALE DRAWING

TITLE: Centerline Shelf / Vented

SIZE	DWG. NO.	REV
A	1907-3-000-03	A

SCALE: 1:6 | SHEET 1 OF 1

5 4 3 2 1